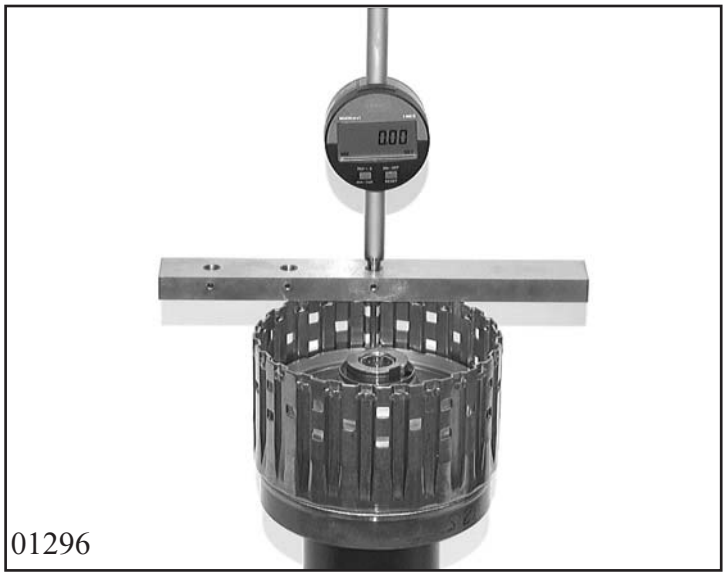

01296

1.4.5 Clearance setting, clutch E (snap ring)

Determine space requirement $\mathbf{E_E}$ of clutch with measuring bar 5p01 000 330. For this purpose, place measuring bar 5p01 000 330 on cylinder edge of clutch E. Place measuring base on the highest point of the disk support area at the piston and set dial gauge to “0”.
Pull measuring sensor upwards, insert into snap ring groove and press against the upper edge of the groove.

Read off measured value at dial gauge ➪ $\mathbf{W_E}$

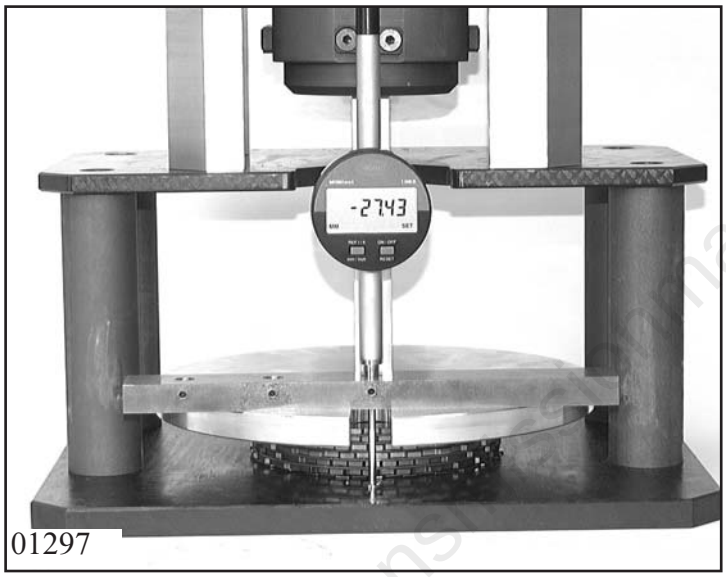

01297

Determine thickness $\mathbf{M_E}$ of clutch E clutch pack according to **Chapter 1.4.0 Measuring clutch pack**.

➪ $\mathbf{M_E}$

Space requirement $\mathbf{E_E}$ resultsfrom measured value $\mathbf{W_E}$ plus base thickness **F**. ➪ $\mathbf{E_E}$

Test value $\mathbf{P_E}$ is therefore space requirement $\mathbf{E_E}$ minus $\mathbf{M_E}$.

Value $\mathbf{P_E}$ should be between 3.83 and 5.83 mm.
Testing specification 1068 700 048
Version ***B***.

Select snap ring $\mathbf{S_E}$ with test value $\mathbf{P_E}$.

Calculation:
$\mathbf{E_E = W_E + F}$
$\mathbf{P_E = E_E - M_E}$

Clearance $\mathbf{L_E}$ with 5 lining disks should be between 1.84 and 2.37 mm.

Transmission-manuals.com

Example (for 1.4.5):

F = 1.48 mm (base thickness)
W_E = 30.27 mm
M_E = 27.43 mm

E_E = 30.27 + 1.48
= 31.75 mm
P_E = 31.75 □ 27.43
= 4.32 mm

S_E = 2.4 mm

L_E = 4.32 □ 2.4
⇨ L_E = 1.92 mm

Transmissionmanuals.com